2406

- 3-Jaw chuck for automatic lathes
- Power transmission wedge system
- High load carrying capacity
- Prolonged durability for sustained performance
- High gripping accuracy and repeatability
- Manufactured from high grade alloy steel which extends machine life while providing higher rigidity and greater wear resistance
- Hardened and ground working surfaces ensure longer life with maintained accuracy and repeatability
- Master jaws secured against throw-off
- Master jaws lubricated directly
- Unbalance G 6.3

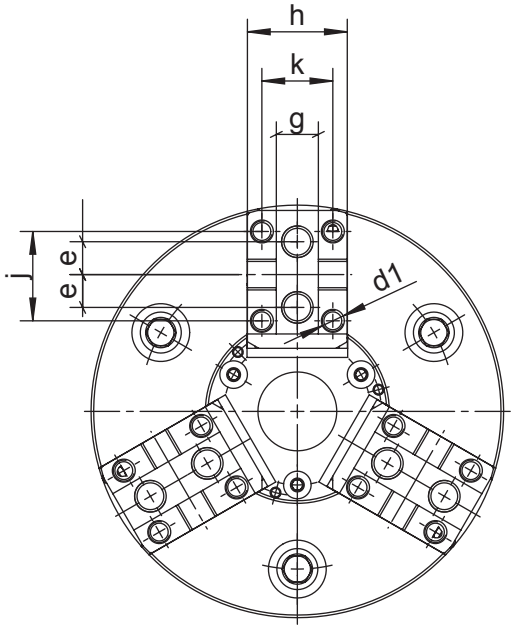

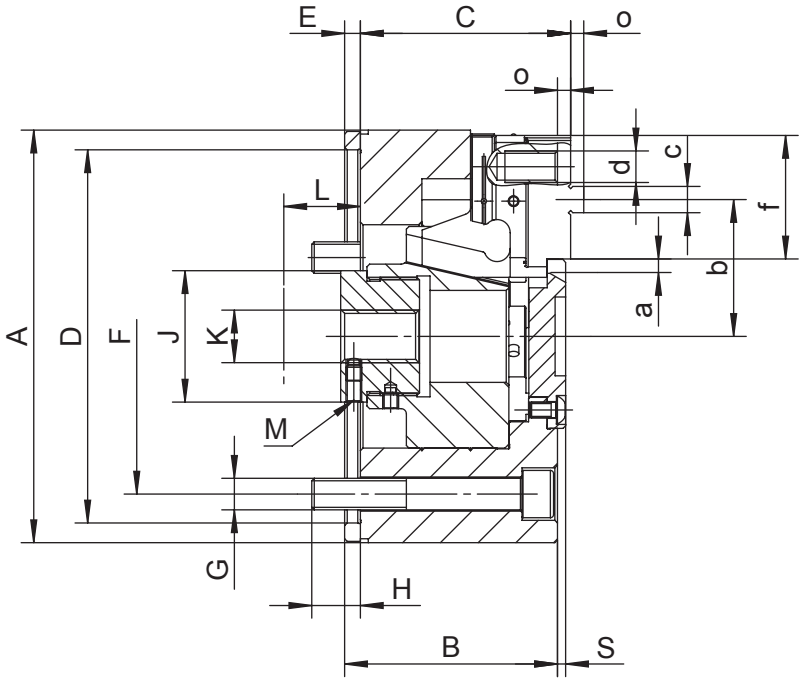

Code No.	7-753-0600
Type	2406-160
A [mm]	157
B [mm]	81
C -0,05 [mm]	80
Mounting D H6 [mm]	142
E [mm]	6
F [mm]	120
G [mm]	3 x M12
H [mm]	18.5
J [mm]	50
K [mm]	M20
Max. drawbar stroke L [mm]	17.5
M [mm]	M6
S [mm]	3.1
Jaw stroke a [mm]	4
b max. [mm]	52.1
c g6 [mm]	10
d [mm]	2 x M12 x 20
d1 [mm]	4 x M8 x 12
e [mm]	12.5
f [mm]	47
g H7 [mm]	16
h [mm]	38
j [mm]	34
k max. [mm]	27
o [mm]	5
Max. pulling force [kN]	20
Max. clamping force [kN]	55
Max. speed [rpm]	6,000
Moment of inertia [kgm²]	0.03
Weight without top jaws [lbs]	20.94

Larger sizes available upon request!